Summary

150 kVA, three-phase general-purpose dry-type isolation transformer. 480V delta primary to 240V/120 delta, center tap secondary. Aluminum windings, electrostatic shielding, ventilated NEMA 3R enclosure.

Product Description

The Sanzo Power TX-DV-150M-3-325322-AL is a 150 kVA three-phase dry-type isolation transformer that converts 480V delta power to 240V/120 delta, center tap for commercial and industrial distribution. The 240V delta secondary serves three-phase equipment and provides a 120V center tap for compatible single-phase loads. The high leg is not a 120V supply. Primary and secondary windings are electrically isolated.

Vacuum-pressure-impregnated aluminum windings use a 220°C insulation system with 150°C temperature rise. Natural-convection cooling supports continuous distribution duty.

Front-access terminal lugs simplify field wiring. The bolt-together steel enclosure has replaceable panels, upper hooded vents and continuous mounting runners.

Specifications

Phase	Three Phase (3-PH), AC	**Transformer Type**	Isolation / Distribution
Capacity	150 kVA	**Duty**	Continuous, General Purpose
Primary Voltage	480V delta	**Winding Material**	Aluminum
Secondary Voltage	240V/120 delta, center tap	**Insulation System**	220°C
Primary Current	180.4 A	**Temperature Rise**	150°C
Secondary Current	360.8 A	**Cooling**	AA / Natural Convection
Frequency	60 Hz	**Impregnation**	Vacuum Pressure Impregnated
Primary Taps	(2) 2.5% Above, (4) 2.5% Below	**Electrostatic Shield**	Full Interwinding Shield
Tap Rating	Full Capacity; De-energized	**Primary Termination**	Terminal Lugs
Primary Connection	Delta / H1, H2, H3	**Secondary Termination**	Terminal Lugs
Secondary Connection	Delta / 120V Center Tap	**Termination Access**	Front Access Cover
DOE 2016 Minimum	98.83% at 35% Load	**Enclosure**	NEMA 3R, Ventilated Steel
Voltage Direction	Step-Down	**Finish**	ANSI 61 Grey Powder Coat
Dimensions L x W x H	37.60" x 36.89" x 49.21"	**Mounting**	Floor / Continuous Runners

Ratings & Certifications

- cETLus - United States & Canada
- DOE 2016 Efficiency
- UL 1561 / CSA C22.2 No. 47
- NEMA 3R Indoor / Outdoor

Common Applications

- Commercial Power Distribution
- HVAC / Mechanical Systems
- Industrial Machinery
- Pumps & Process Equipment

Installation: Use the connection diagram for tap selection and field wiring. De-energize before changing taps; maintain ventilation and service access.

Enclosure Outline

LENGTH (L) x WIDTH (W) x HEIGHT (H)

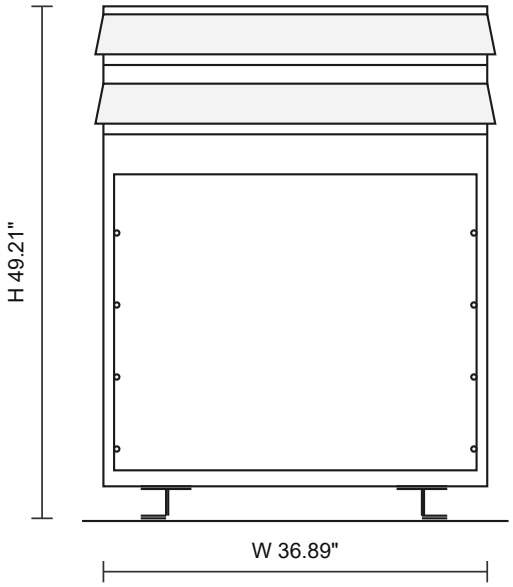

FRONT - UPPER VENTS

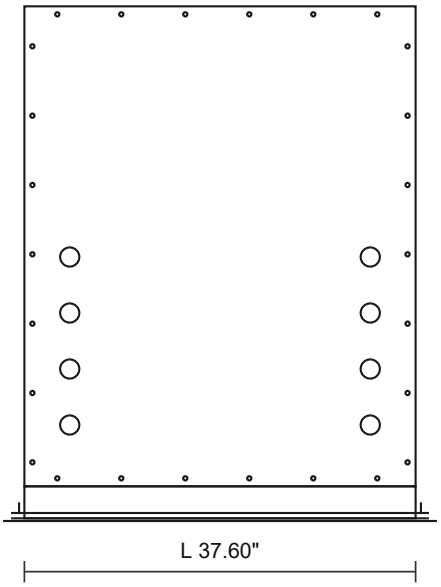

SIDE

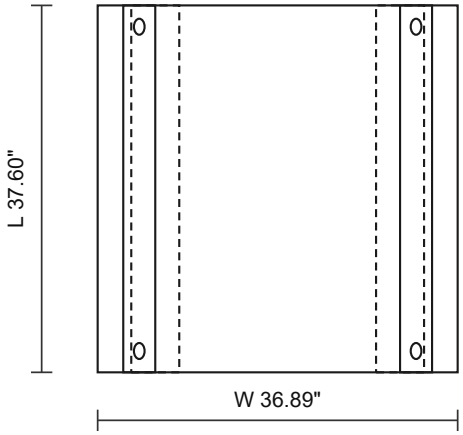

BOTTOM (UNDERSIDE)

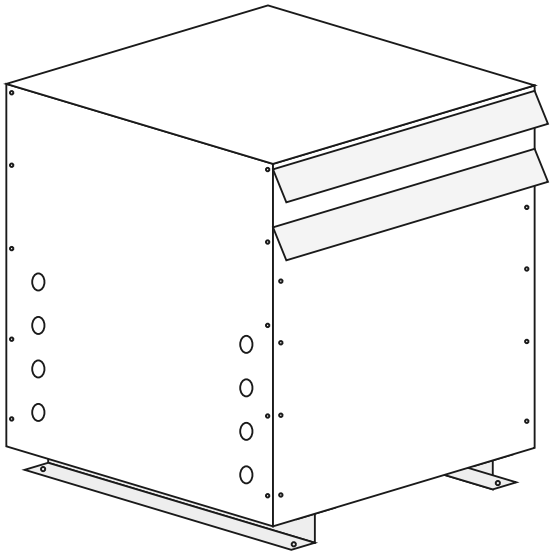

ISOMETRIC - UPRIGHT

Continuous T-top / outward L-floor runners

Capacity	Length (L)	Width (W)	Height (H)
150 kVA	37.60"	36.89"	49.21"

Overall dimensions include mounting runners. Length runs front to rear.

Anchor spacing, lifting provisions and conduit openings by approved drawing. Dashed underside lines show upper mounting flange.

Winding & Connection Overview

PRIMARY - 480V delta

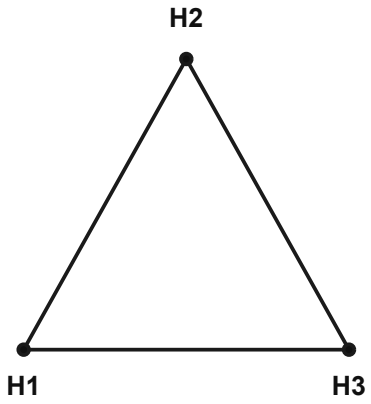

DELTA / H PRIMARY

SECONDARY - 240V/120 delta, center tap

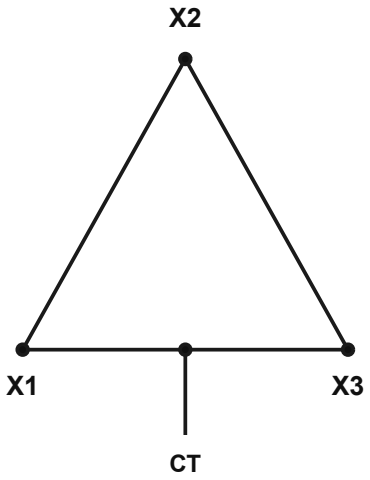

DELTA, CENTER TAP / X SECONDARY

H identifies the primary; X identifies the secondary. Purpose-built for the stated voltage direction. Electrostatic shield and enclosure bond to equipment ground. Diagrams show winding topology; final links and phase displacement follow the nameplate.

Tap setting	Primary input	Supply lines
+5%	504V	H1, H2, H3
+2.5%	492V	H1, H2, H3
Nominal	480V	H1, H2, H3
-2.5%	468V	H1, H2, H3
-5%	456V	H1, H2, H3
-7.5%	444V	H1, H2, H3
-10%	432V	H1, H2, H3

Secondary lines	Nominal voltage
X1, X2, X3	240V line-line
X1 or X3 to CT	120V
X2 to CT (high leg)	207.8V
Neutral terminal	CT; final label by nameplate

Tap entries are voltage settings, not physical jumper numbers. De-energize before changing taps and set all three phases alike.

Nominal full-load current: primary 180.4 A; secondary 360.8 A. For multiple voltages, current depends on the selected connection. Individual phase or half-winding loading must remain within the nameplate rating.

Use the approved manufacturer connection diagram for installation, grounding, overcurrent protection and terminal torque.

Construction & Installation Details

The continuous mounting runners use a T flange at the enclosure and an outward-only L flange at the floor. Replaceable bolt-on panels allow enclosure repairs without replacing the full housing.

Length (L)	37.60"
Width (W)	36.89"
Height (H)	49.21"
Mounting	Floor / Continuous Runners

Dimensions are L x W x H. Length runs front to rear. Overall height includes the mounting runners.

Electrical Connections

Primary Lines	H1, H2, H3; delta input
Secondary Lines	X1, X2, X3; 240V/120 delta, center tap
Neutral	120V center tap; high leg is not a 120V source
Shield / Ground	Electrostatic shield bonded to enclosure equipment ground
Tap Operation	(2) 2.5% Above, (4) 2.5% Below; all phases set alike
Connection Access	Front-access cover; terminal lug connections

Service & Installation

Location	Indoor or outdoor; NEMA 3R enclosure
Cooling / Ventilation	Natural convection; keep upper vents unobstructed
Mounting Support	Level, structurally adequate floor or pad
Panel Replacement	Individual bolted panels are replaceable
Grounding	Provide equipment grounding and secondary bonding for the installation
Load Selection	Size for connected kVA, starting duty and phase loading

Primary and secondary windings are electrically isolated. This transformer is purpose-built for the listed voltage direction. Follow the unit nameplate for conductor sizes, terminal torque, overcurrent protection and installation clearances.