XFMR DIRECT

TX-BB-504Y-480Y.277-18.5KW

Wiring Diagram and Connection Guide

Diagram L2 | 504 V input to 480 V nominal output

Three phase wye | Primary series / secondary parallel | Buck

Continuous output rating: 24.72 A | Calculated output: 480.00 V

1. Join X4 and X3 on each unit.
2. Join X2 and X1 on each unit.
3. Connect 504 V INPUT A to X4 and X3 on Unit 1.
4. Connect 504 V INPUT B to X4 and X3 on Unit 2.
5. Connect 504 V INPUT C to X4 and X3 on Unit 3.
6. Connect 480 V OUTPUT A to X1 and H4 and X2 on Unit 1.
7. Connect 480 V OUTPUT B to X1 and H4 and X2 on Unit 2.
8. Connect 480 V OUTPUT C to X1 and H4 and X2 on Unit 3.
9. Join H2 and H3 on each unit.
10. Connect INPUT and OUTPUT N to H1 on Unit 1.
11. Bridge N connections between all units.

BASE: 3 x TX-B2-075H-115216 | 750 VA each

Use this diagram only with 240/480 V primary / 24/48 V secondary.

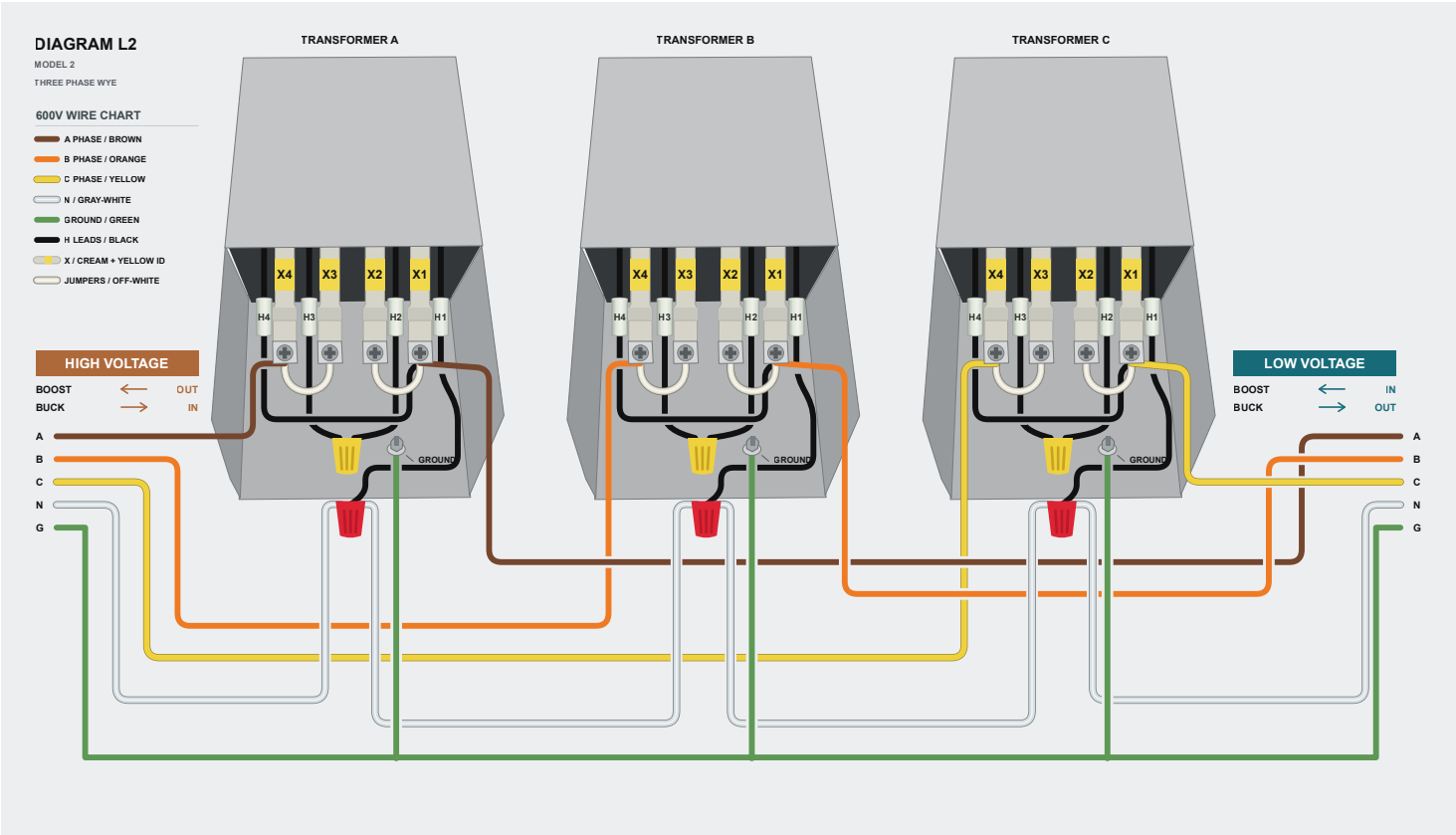

Drawing: LOW VOLTAGE = 480 V OUTPUT; HIGH VOLTAGE = 504 V INPUT.

Disconnect power and verify de-energized before wiring. Bond every enclosure to equipment ground.
Follow the terminal identifiers shown; H2/H3 and X2/X3 differ from some other manufacturers.
Verify input and all output voltages before connecting the load. No circuit isolation is provided.
A supply neutral is required and must be carried through; no neutral is created.