XFMR DIRECT

TX-BB-399D-380D-2.2KW

Wiring Diagram and Connection Guide

Diagram H2 | 399 V input to 380 V nominal output

Three phase delta | Primary series / secondary parallel | Buck

Continuous output rating: 3.71 A | Calculated output: 380.00 V

1. Join X4 and X3 on each unit.
2. Join X2 and X1 on each unit.
3. Connect 399 V INPUT A to X4 and X3 on Unit 1.
4. Connect 399 V INPUT C to X4 and X3 on Unit 2.
5. Connect 380 V OUTPUT A to X1 and H4 and X2 on Unit 1.
6. Connect 380 V OUTPUT C to X1 and H4 and X2 on Unit 2.
7. Join H2 and H3 on each unit.
8. Connect INPUT and OUTPUT B to H1 on Unit 1.
9. Bridge B connections between all units.

BASE: 2 x TX-B1-010H-115216 | 100 VA each

Use this diagram only with 240/480 V primary / 24/48 V secondary.

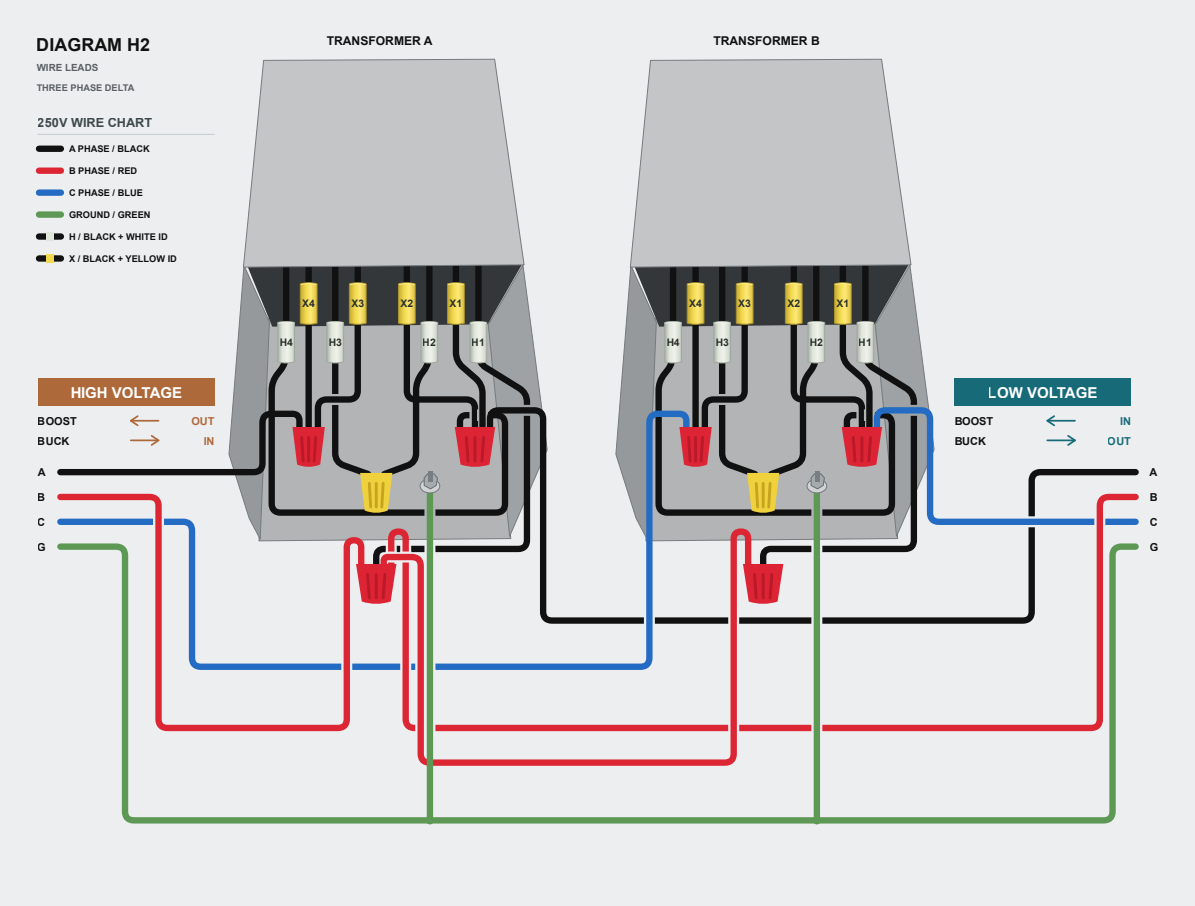

Drawing: LOW VOLTAGE = 380 V OUTPUT; HIGH VOLTAGE = 399 V INPUT.

Disconnect power and verify de-energized before wiring. Bond every enclosure to equipment ground.
Follow the terminal identifiers shown; H2/H3 and X2/X3 differ from some other manufacturers.
Verify input and all output voltages before connecting the load. No circuit isolation is provided.
This connection does not create a neutral. Installation must be performed by a qualified electrician.