XFMR DIRECT

TX-BB-380Y-418Y.241-2HP

Wiring Diagram and Connection Guide

Diagram K2 | 380 V input to 418 V nominal output

Three phase wye | Primary series / secondary series | Boost

Continuous output rating: 2.29 A | Calculated output: 418.00 V

1. Join X2 and X3 on each unit.
2. Join H2 and H3 on each unit.
3. Connect 418 V OUTPUT A to X4 on Unit 1.
4. Connect 418 V OUTPUT B to X4 on Unit 2.
5. Connect 418 V OUTPUT C to X4 on Unit 3.
6. Connect 380 V INPUT A to X1 and H4 on Unit 1.
7. Connect 380 V INPUT B to X1 and H4 on Unit 2.
8. Connect 380 V INPUT C to X1 and H4 on Unit 3.
9. Connect INPUT and OUTPUT N to H1 on Unit 1.
10. Bridge N connections between all units.

BASE: 3 x TX-B1-010H-124202 | 100 VA each

Use this diagram only with 120/240 V primary / 12/24 V secondary.

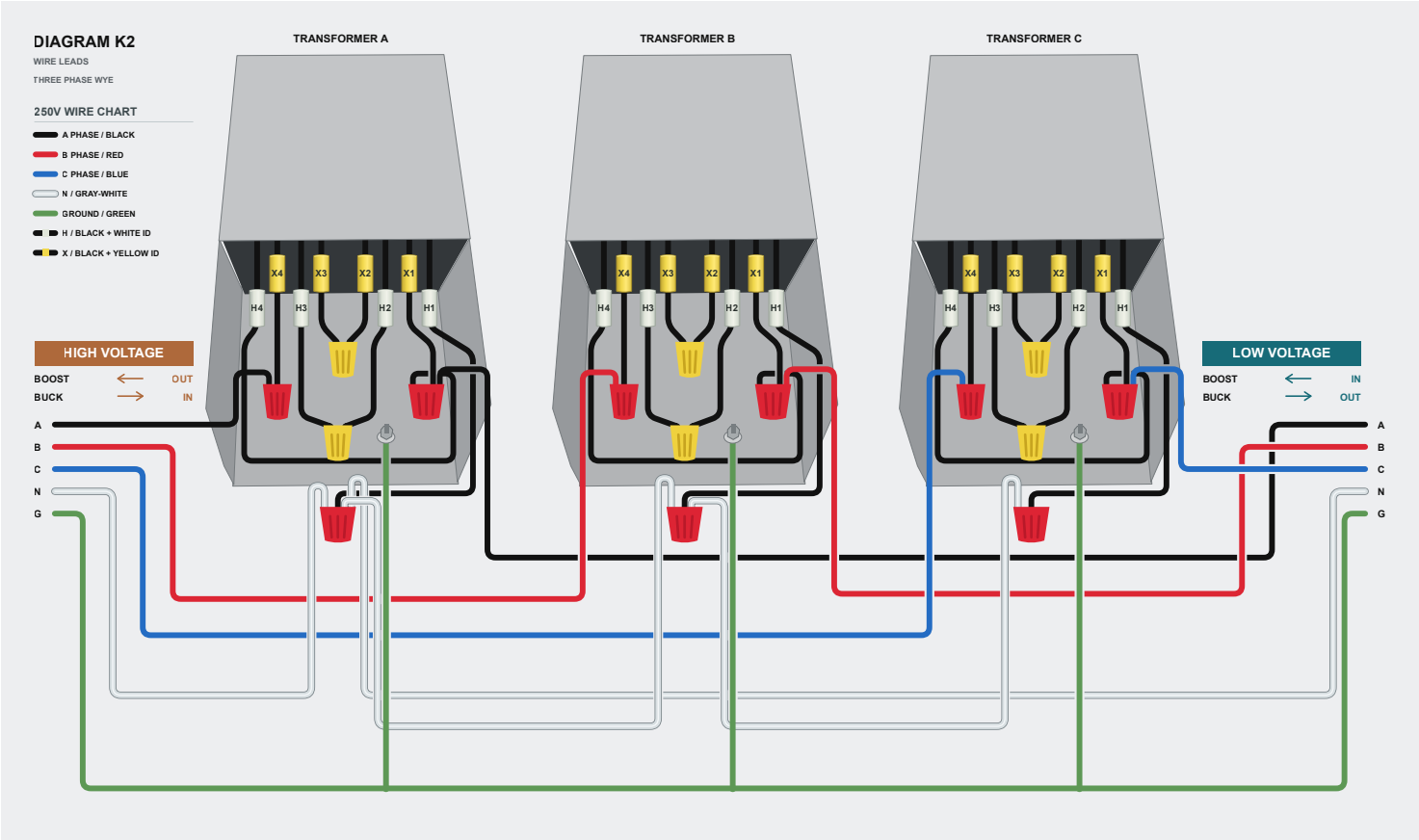

Drawing: LOW VOLTAGE = 380 V INPUT; HIGH VOLTAGE = 418 V OUTPUT.

Disconnect power and verify de-energized before wiring. Bond every enclosure to equipment ground.
Follow the terminal identifiers shown; H2/H3 and X2/X3 differ from some other manufacturers.
Verify input and all output voltages before connecting the load. No circuit isolation is provided.
A supply neutral is required and must be carried through; no neutral is created.