XFMR DIRECT

TX-BB-230Y-200Y.115-22KW

Wiring Diagram and Connection Guide

Diagram J2 | 230 V input to 200 V nominal output

Three phase wye | Primary parallel / secondary parallel | Buck

Continuous output rating: 70.57 A | Calculated output: 202.94 V

1. Join X4 and X3 on each unit.
2. Connect 230 V INPUT A to X4 and X3 on Unit 1.
3. Connect 230 V INPUT B to X4 and X3 on Unit 2.
4. Connect 230 V INPUT C to X4 and X3 on Unit 3.
5. Join X2 and X1 on each unit.
6. Connect 200 V OUTPUT A to X1 and H4 and X2 and H3 on Unit 1.
7. Connect 200 V OUTPUT B to X1 and H4 and X2 and H3 on Unit 2.
8. Connect 200 V OUTPUT C to X1 and H4 and X2 and H3 on Unit 3.
9. Connect INPUT and OUTPUT N to H1 and H2 on Unit 1.
10. Bridge N connections between all units.

BASE: 3 x TX-B3-010K-124210 | 1000 VA each

Use this diagram only with 120/240 V primary / 16/32 V secondary.

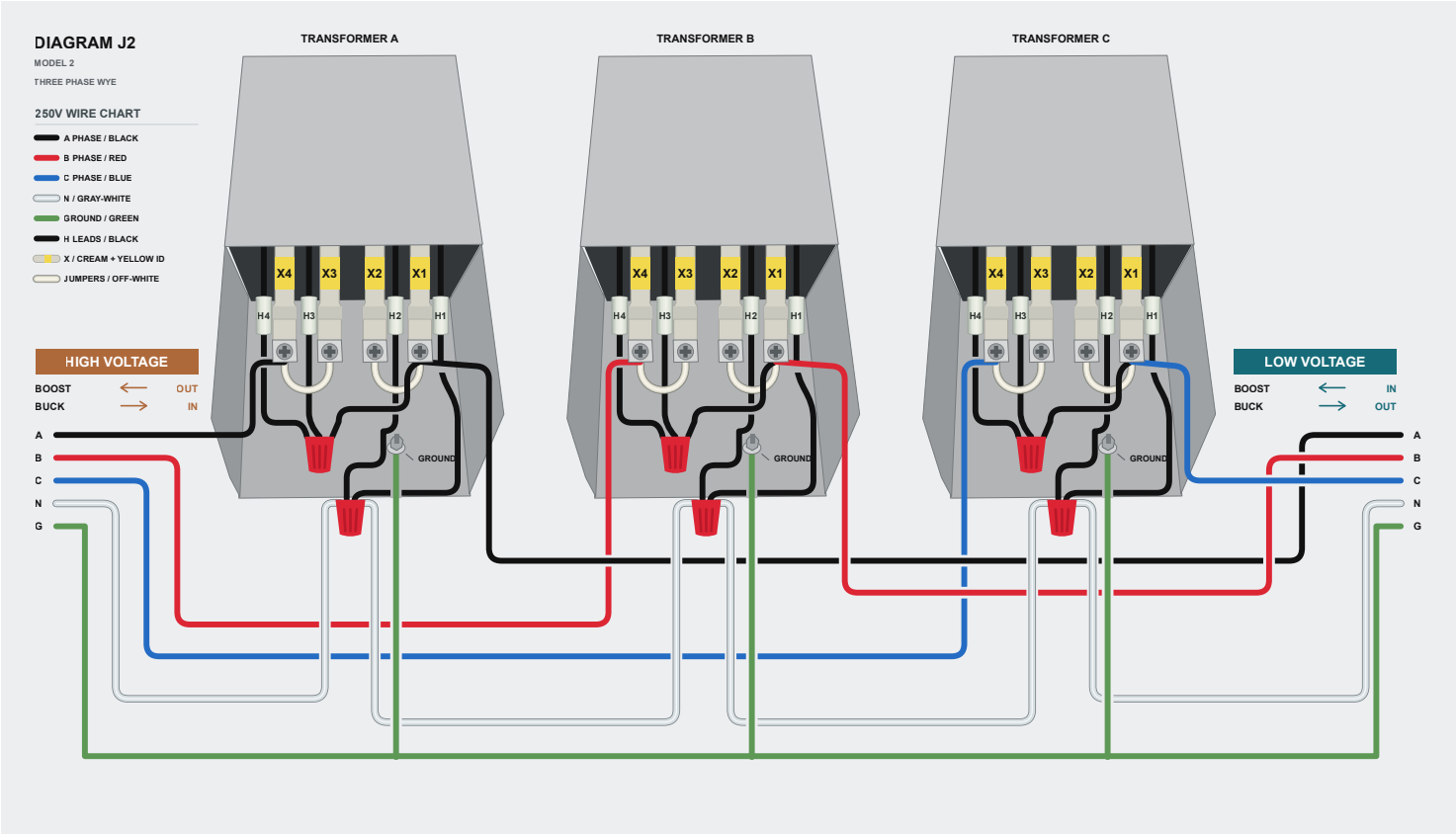

Drawing: LOW VOLTAGE = 200 V OUTPUT; HIGH VOLTAGE = 230 V INPUT.

Disconnect power and verify de-energized before wiring. Bond every enclosure to equipment ground.
Follow the terminal identifiers shown; H2/H3 and X2/X3 differ from some other manufacturers.
Verify input and all output voltages before connecting the load. No circuit isolation is provided.
A supply neutral is required and must be carried through; no neutral is created.