XFMR DIRECT

TX-BB-220D-230D-30HP

Wiring Diagram and Connection Guide

Diagram H2 | 220 V input to 230 V nominal output

Three phase delta | Primary series / secondary parallel | Boost

Continuous output rating: 62.42 A | Calculated output: 231.00 V

1. Join X4 and X3 on each unit.
2. Join X2 and X1 on each unit.
3. Connect 230 V OUTPUT A to X4 and X3 on Unit 1.
4. Connect 230 V OUTPUT C to X4 and X3 on Unit 2.
5. Connect 220 V INPUT A to X1 and H4 and X2 on Unit 1.
6. Connect 220 V INPUT C to X1 and H4 and X2 on Unit 2.
7. Join H2 and H3 on each unit.
8. Connect INPUT and OUTPUT B to H1 on Unit 1.
9. Bridge B connections between all units.

BASE: 2 x TX-B2-075H-124202 | 750 VA each

Use this diagram only with 120/240 V primary / 12/24 V secondary.

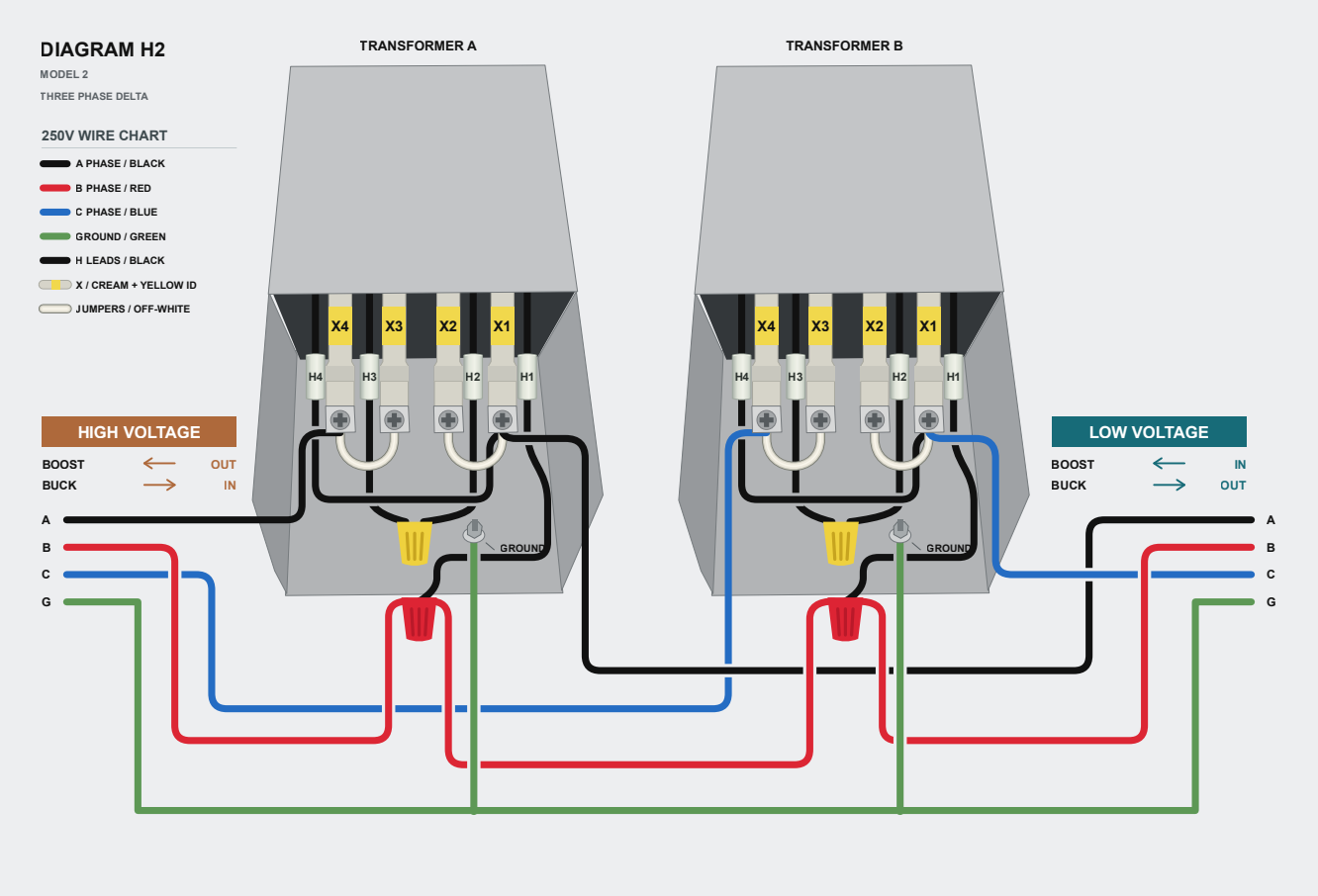

Drawing: LOW VOLTAGE = 220 V INPUT; HIGH VOLTAGE = 230 V OUTPUT.

Disconnect power and verify de-energized before wiring. Bond every enclosure to equipment ground.
Follow the terminal identifiers shown; H2/H3 and X2/X3 differ from some other manufacturers.
Verify input and all output voltages before connecting the load. No circuit isolation is provided.
This connection does not create a neutral. Installation must be performed by a qualified electrician.