# XFMR DIRECT

**TX-BB-208Y-189Y.109-55KW**

Wiring Diagram and Connection Guide

## Diagram J2 | 208 V input to 189 V nominal output

Three phase wye | Primary parallel / secondary parallel | Buck

**Continuous output rating: 186.68 A | Calculated output: 189.09 V**

1. Join X4 and X3 on each unit.
2. Connect 208 V INPUT A to X4 and X3 on Unit 1.
3. Connect 208 V INPUT B to X4 and X3 on Unit 2.
4. Connect 208 V INPUT C to X4 and X3 on Unit 3.
5. Join X2 and X1 on each unit.
6. Connect 189 V OUTPUT A to X1 and H4 and X2 and H3 on Unit 1.
7. Connect 189 V OUTPUT B to X1 and H4 and X2 and H3 on Unit 2.
8. Connect 189 V OUTPUT C to X1 and H4 and X2 and H3 on Unit 3.
9. Connect INPUT and OUTPUT N to H1 and H2 on Unit 1.
10. Bridge N connections between all units.

**BASE: 3 x TX-B3-025K-124202 | 2500 VA each**

**Use this diagram only with 120/240 V primary / 12/24 V secondary.**

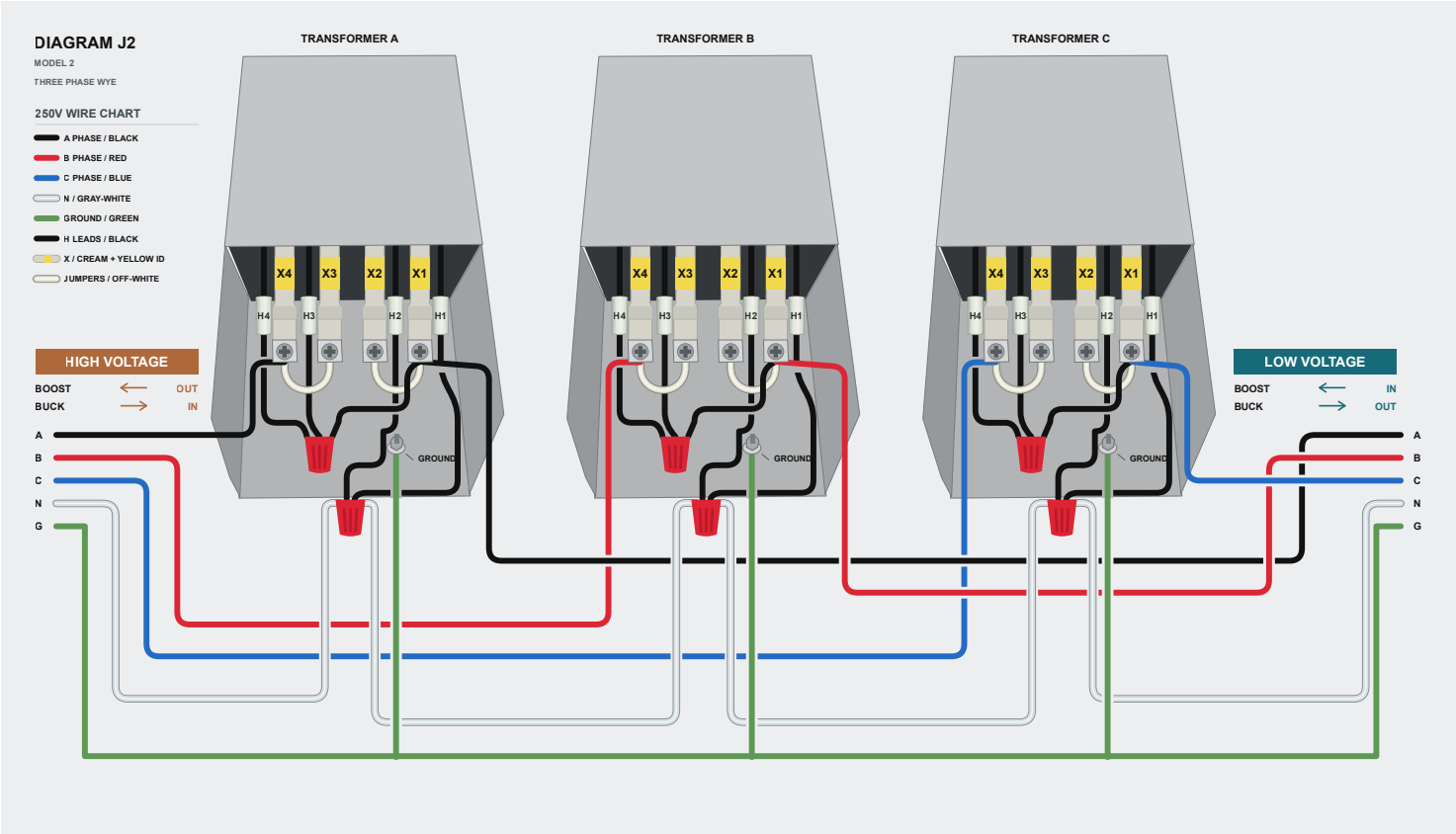


**Drawing: LOW VOLTAGE = 189 V OUTPUT; HIGH VOLTAGE = 208 V INPUT.**

Disconnect power and verify de-energized before wiring. Bond every enclosure to equipment ground.
Follow the terminal identifiers shown; H2/H3 and X2/X3 differ from some other manufacturers.
Verify input and all output voltages before connecting the load. No circuit isolation is provided.
A supply neutral is required and must be carried through; no neutral is created.