Connection Guide
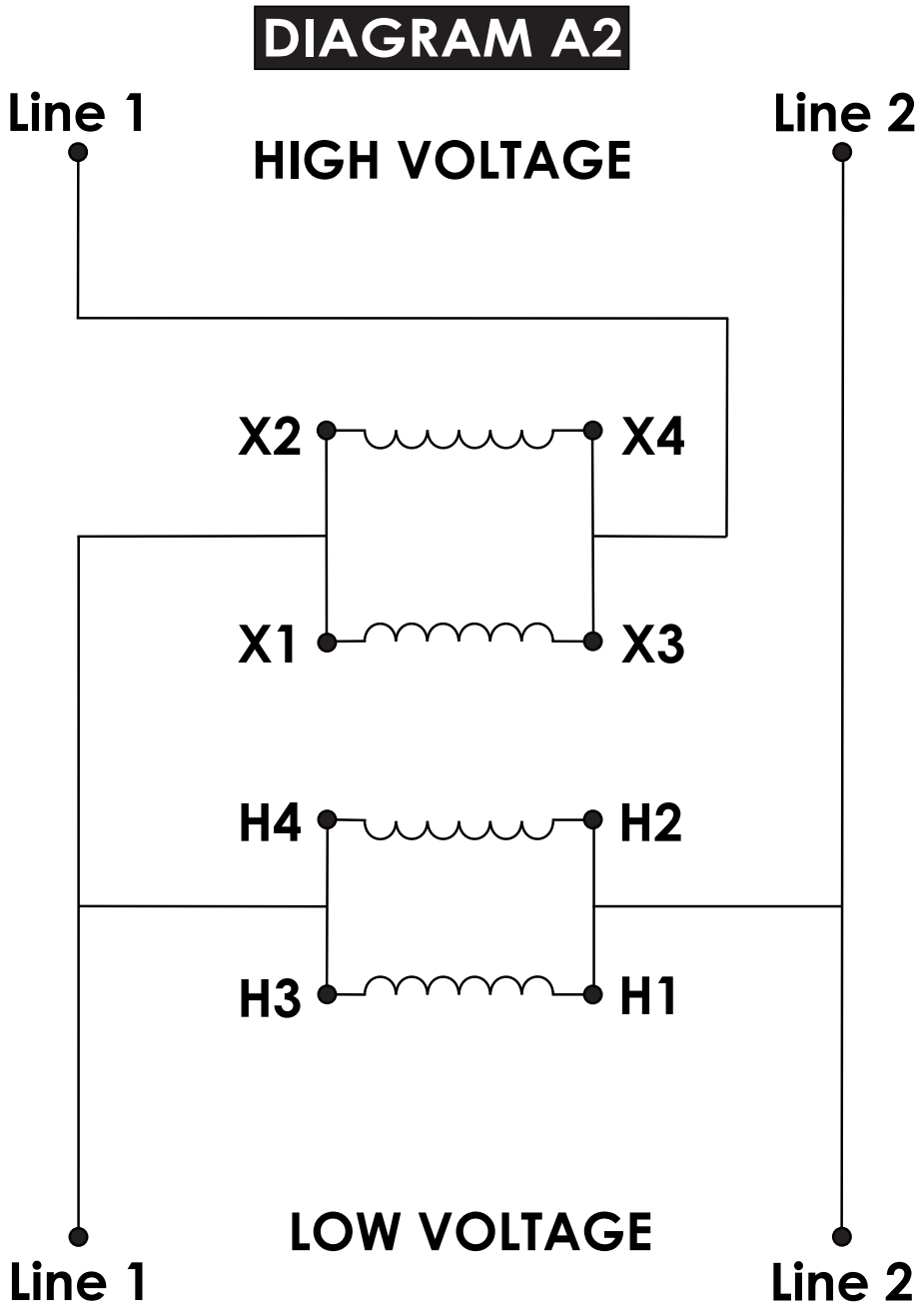
1. Connect **X4** and **X2** together
2. Connect High Voltage **L1** to **X4** and **X3**
3. Connect **X2** and **X1** together
4. Connect Low Voltage **L1** to **X1, X2, H4, H3**
5. Connect High & Low Voltage **L2** to **H1** and **H2**