XFMR DIRECT

TX-BB-200D-240D-5HP

Wiring Diagram and Connection Guide

Diagram E2 | 200 V input to 240 V nominal output

Three phase delta | Primary parallel / secondary series | Boost

Continuous output rating: 9.97 A | Calculated output: 240.00 V

1. Join X2 and X3 on each unit.
2. Connect 240 V OUTPUT A to X4 on Unit 1.
3. Connect 240 V OUTPUT C to X4 on Unit 2.
4. Connect 200 V INPUT A to X1 and H4 and H3 on Unit 1.
5. Connect 200 V INPUT C to X1 and H4 and H3 on Unit 2.
6. Connect INPUT and OUTPUT B to H1 and H2 on Unit 1.
7. Bridge B connections between all units.

BASE: 2 x TX-B2-050H-115216 | 500 VA each

Use this diagram only with 240/480 V primary / 24/48 V secondary.

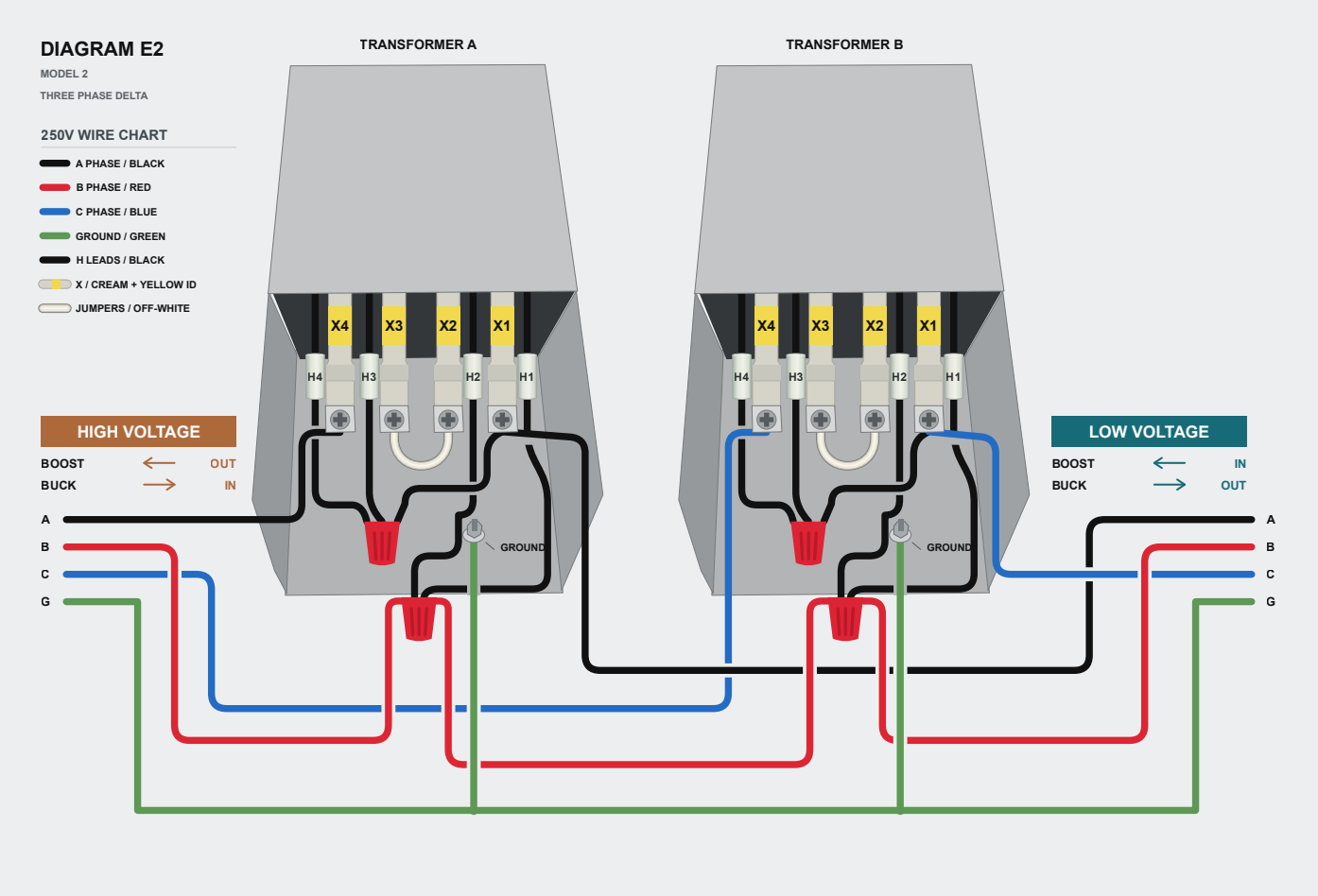

Drawing: LOW VOLTAGE = 200 V INPUT; HIGH VOLTAGE = 240 V OUTPUT.

Disconnect power and verify de-energized before wiring. Bond every enclosure to equipment ground.
Follow the terminal identifiers shown; H2/H3 and X2/X3 differ from some other manufacturers.
Verify input and all output voltages before connecting the load. No circuit isolation is provided.
This connection does not create a neutral. Installation must be performed by a qualified electrician.