Three-phase open delta installation — (2) enclosures required.

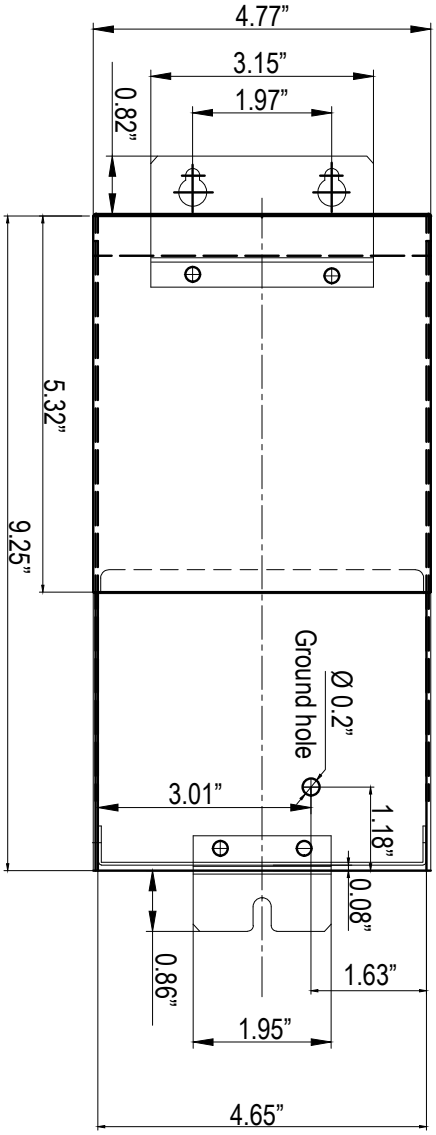

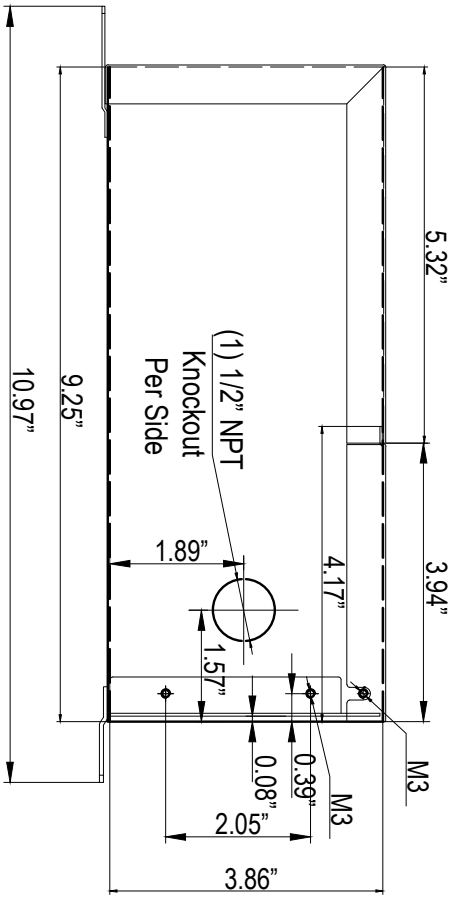

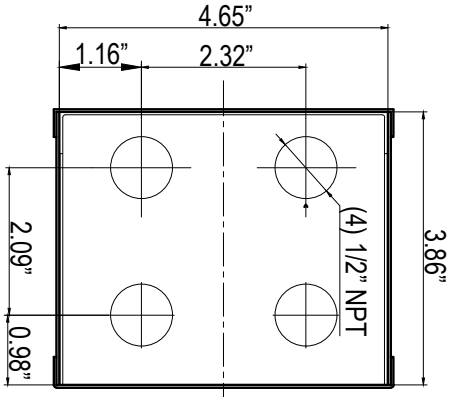

(4) 1/2” NPT Knockouts
Bottom (Underside) Plate